SUSPENSION, REAR SHOCK & MOUNTING - Z26SPD92AN/AH/BN/BH (C750871)

RZR - RZR PRO S ULTIMATE (R01) - Z26SPD92AN/AH/BN/BH

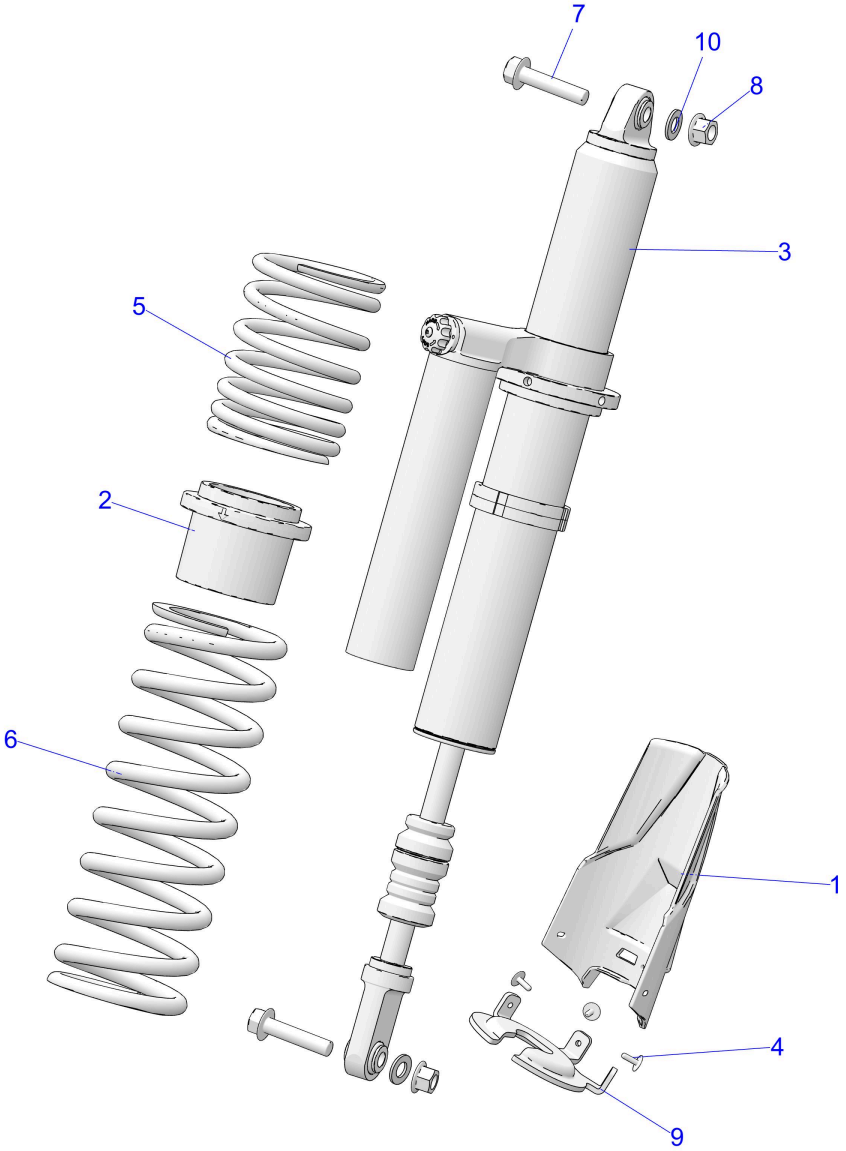

© 2025 Polaris Industries Inc.

C750871

Reference #	Part#	Description	Quantity
1	5454105-070	GUARD-SHOCK ROD,RR,BLK	1
2	5456304	SPACER-SPRING 3.0/3.75	1
3	7046342	SHOCK-REAR,DX	1
4	7621467	RVT-3/16(.251-.375)ST-ST-LF-B	3
5	7045640-737	SPR-175-250# 11.2FL 3.79-ID,S. [AN/BN]	1
5	7045640-458	SPR-175-250#11.2FL 3.79-ID,MBK [AH/BH]	1
6	7045617-737	SPR-200# 15.54FL 3.79-ID,S BLU [AN/BN]	1
6	7045617-458	SPR-200# 15.54FL 3.79-ID,MBLK [AH/BH]	1
7	7521335-65	SCR-HXFL-M14X2.0X65 10.9 ZFB	2
8	7548031	NUT-HXFL-M14X2.0 8 ZTB NYL	2

9	5270086	RETAINER-SPRING,3.75",STAMPED	2
10	7557237	WSHR-FLAT-M14X2.5 ZTB	2

Copyright 1996-2026 Polaris Industries U.S.A All rights reserved.